BLOW OUT DRAWING

Product range: HIX

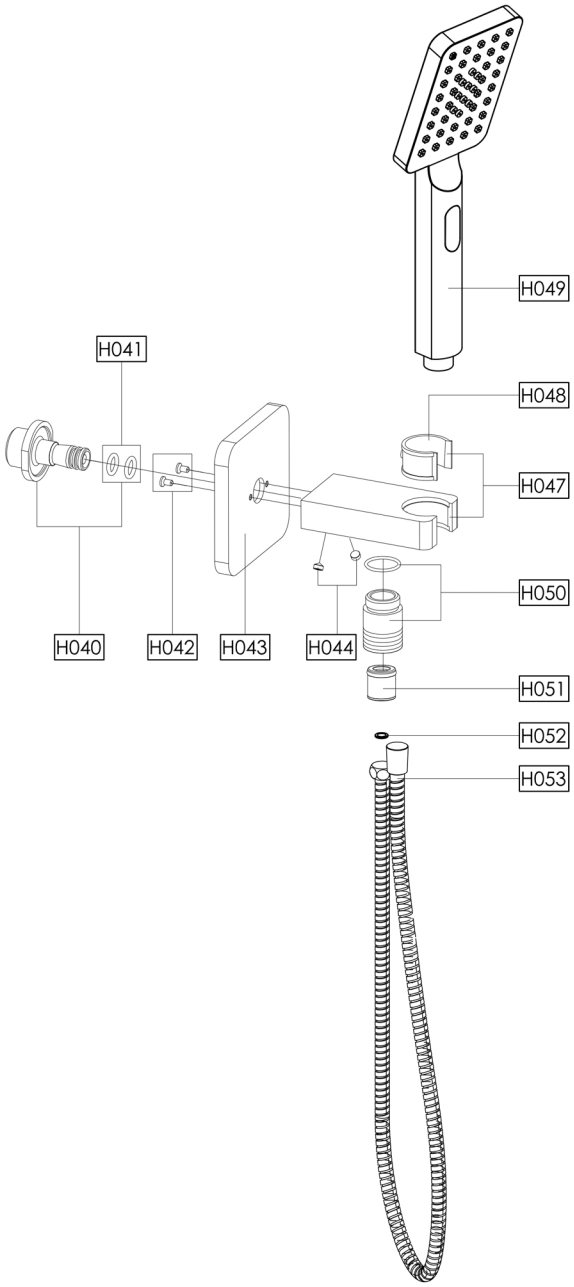

jtpuk.co.uk
technical@jtpuk.co.uk
01895 442211