Technical Data Sheet

Product range: SLIM 1200CM

Product code: SLWCF1200

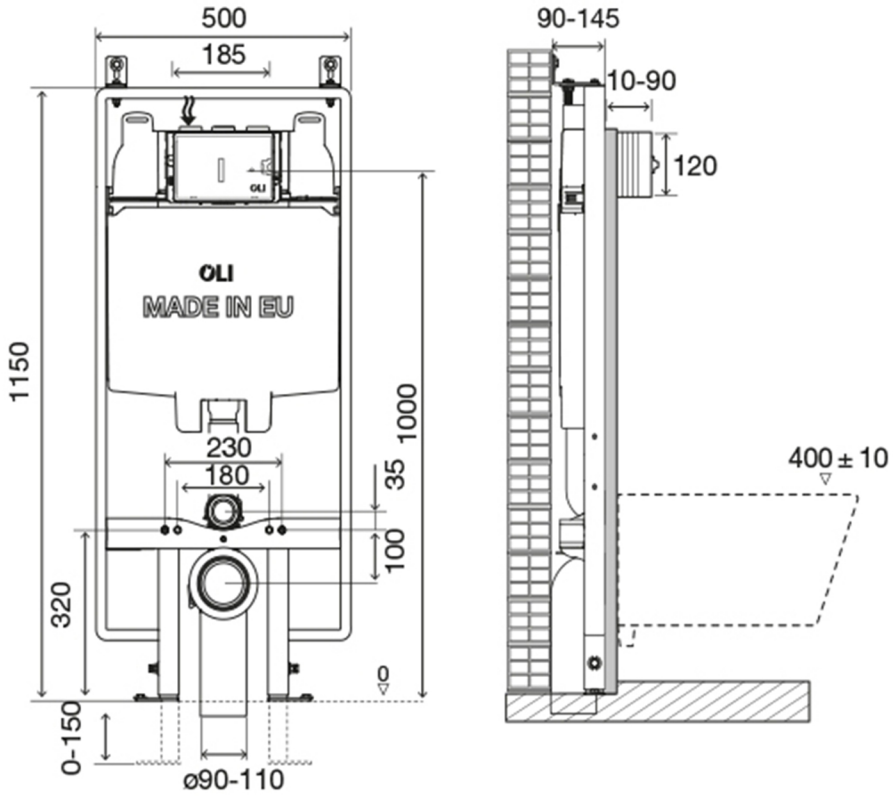

Warranty:
5 Years