Technical Data Sheet

Product range: SOLEX

Product code: 88691
Finishes Available: Chrome

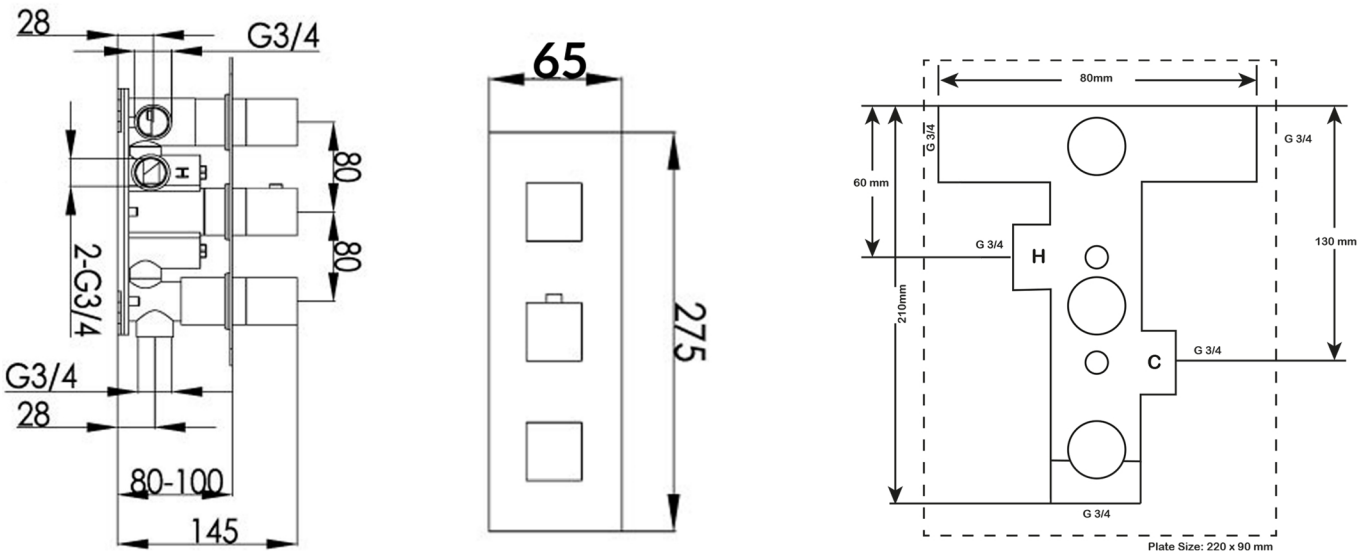

Min Pressure:
MP 0.5

Approvals:
WRAS

Connections:
G3/4"

Warranty:
15 Years (5 on cartriges)

Flow Rate
Diverter side
0.5 Bar: 10.8 L/min
1 Bar: 12.3 L/min
2 Bar: 16.5 L/min
3 Bar: 19.2 Lmin
4 Bar: 22 L/min
5 Bar: 24.8 L/min

Flow Rate
On-Off side
0.5 Bar: 10.9 L/min
1 Bar: 12.3 L/min
2 Bar: 16.2 L/min
3 Bar: 19.8 Lmin
4 Bar: 22.9 L/min
5 Bar: 25.8 L/min