Technical Data Sheet

Product range: ATHENA

Product code: 86439

Finishes Available: Chrome

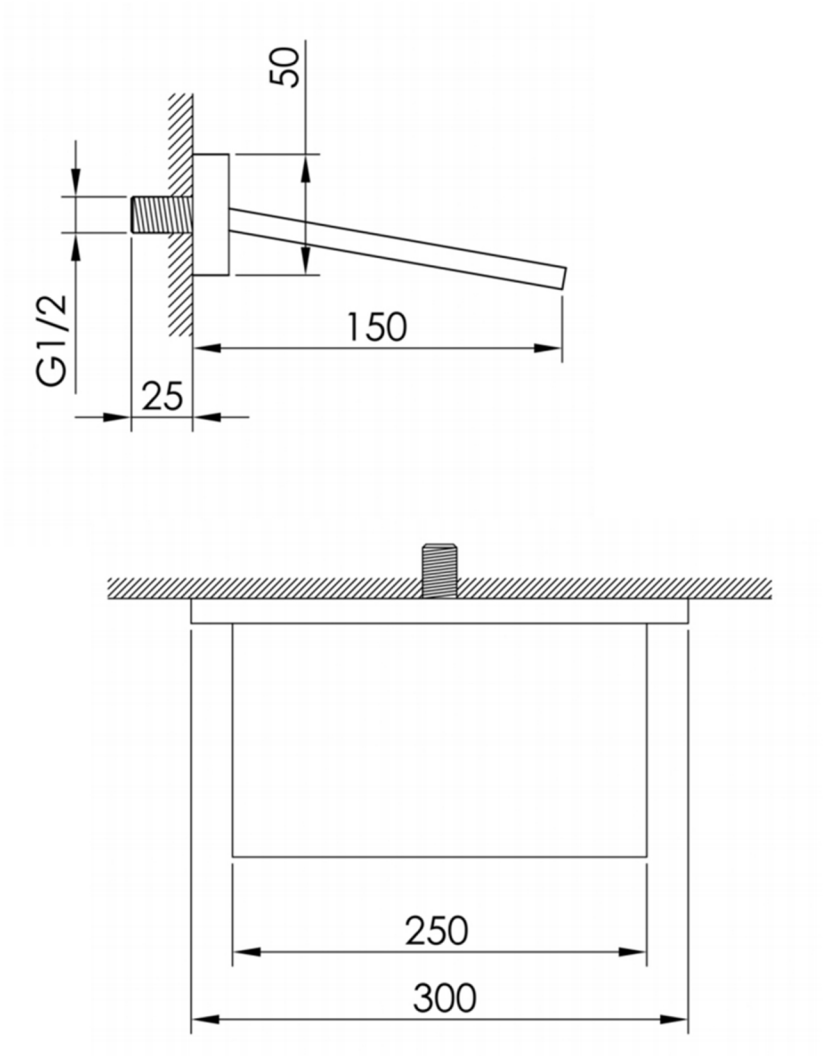

Min Pressure:
HP 1

Approvals:
N/A

Connections:
G 1/2"

Warranty:
15 Years (5 on cartridges)

Flow Rate

0.5Bar: 11.4L/min

1Bar: 13L/min

2Bar: 16.8L/min

3Bar: 20.5L/min

4Bar: 23L/min

5Bar: 25.2L/min