Technical Data Sheet

Product range: GROSVENOR

Product code: 85693, 85693NK, 856693G, GB85693

Finishes Available: Brass with Chrome, Antique Brass, Nickel finishes

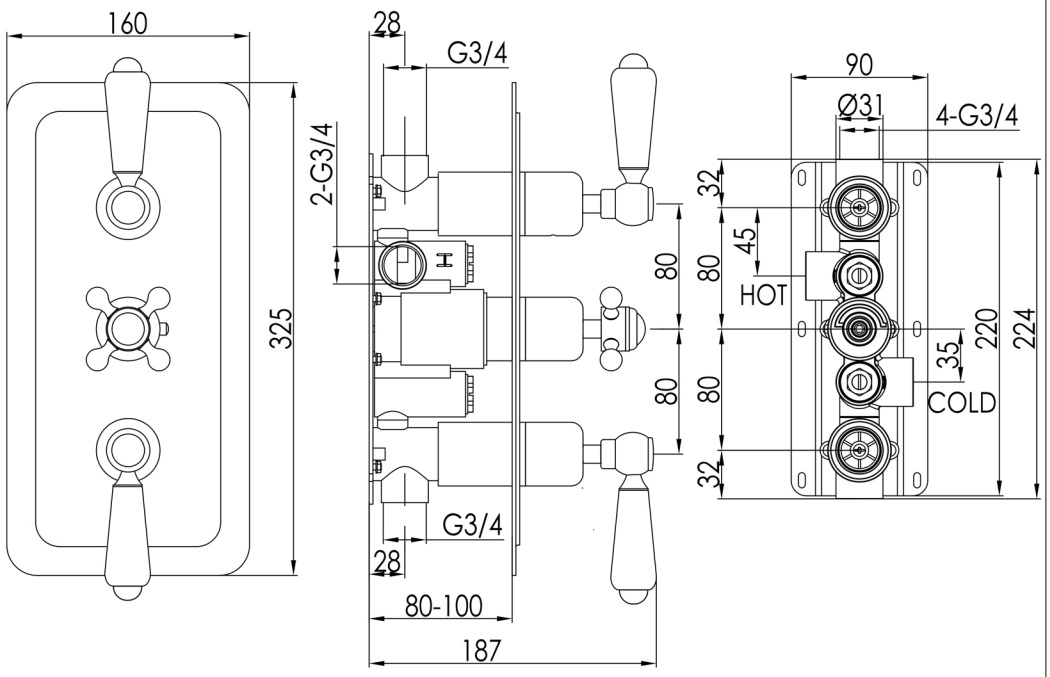

Min Pressure:
MP 0.5

Approvals:
WRAS

Connections:
G 3/4"

Warranty:
15 Years (5 on cartridges)

Flow Rate

0.2Bar: 12L/min

0.5Bar: 17L/min

1Bar: 21L/min

2Bar: 28.5L/min

3Bar: 36L/min