Single lever mono basin mixer

Art NO:55025

Installation

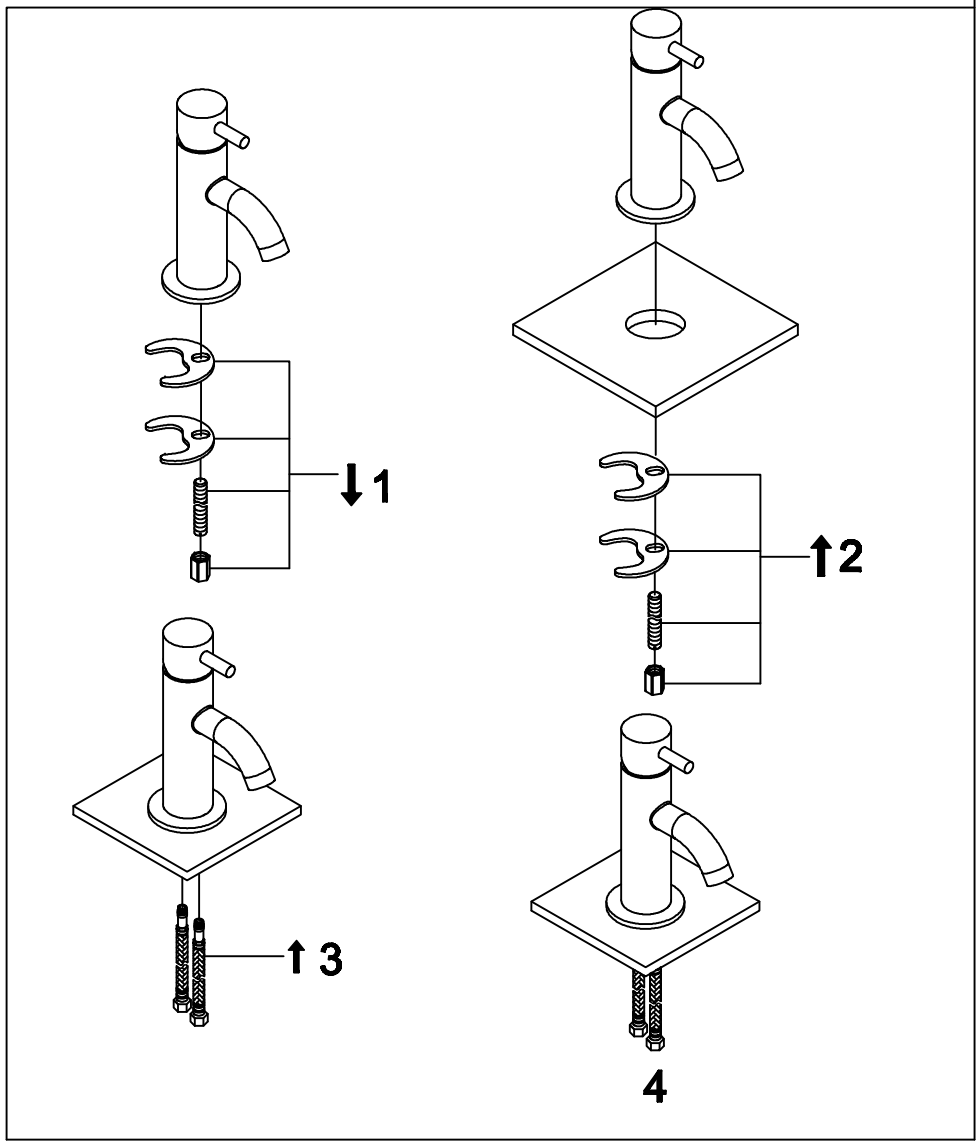

Technique drawing

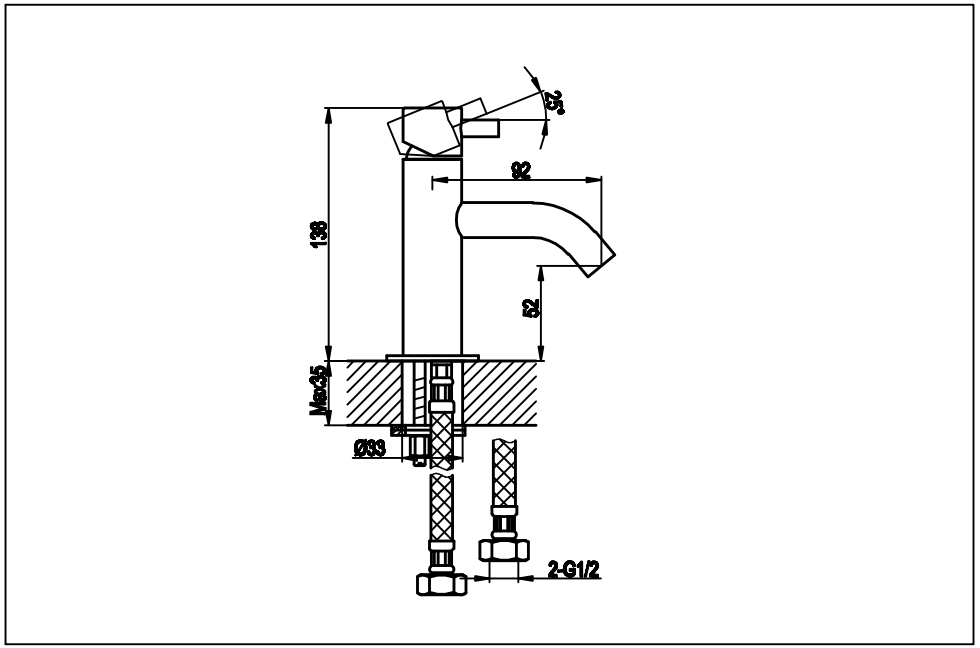
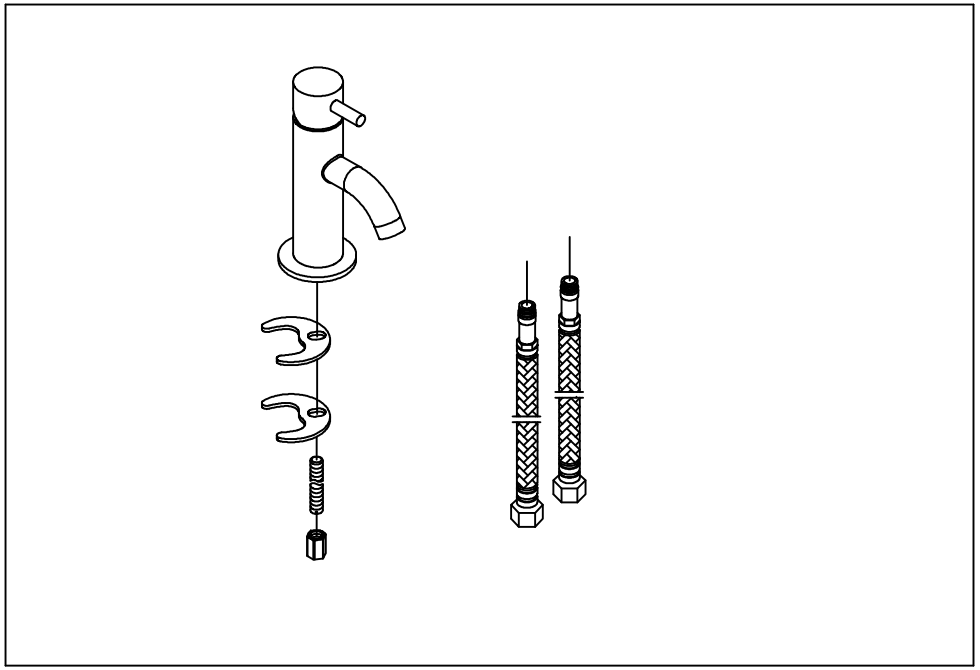
Explosion drawing